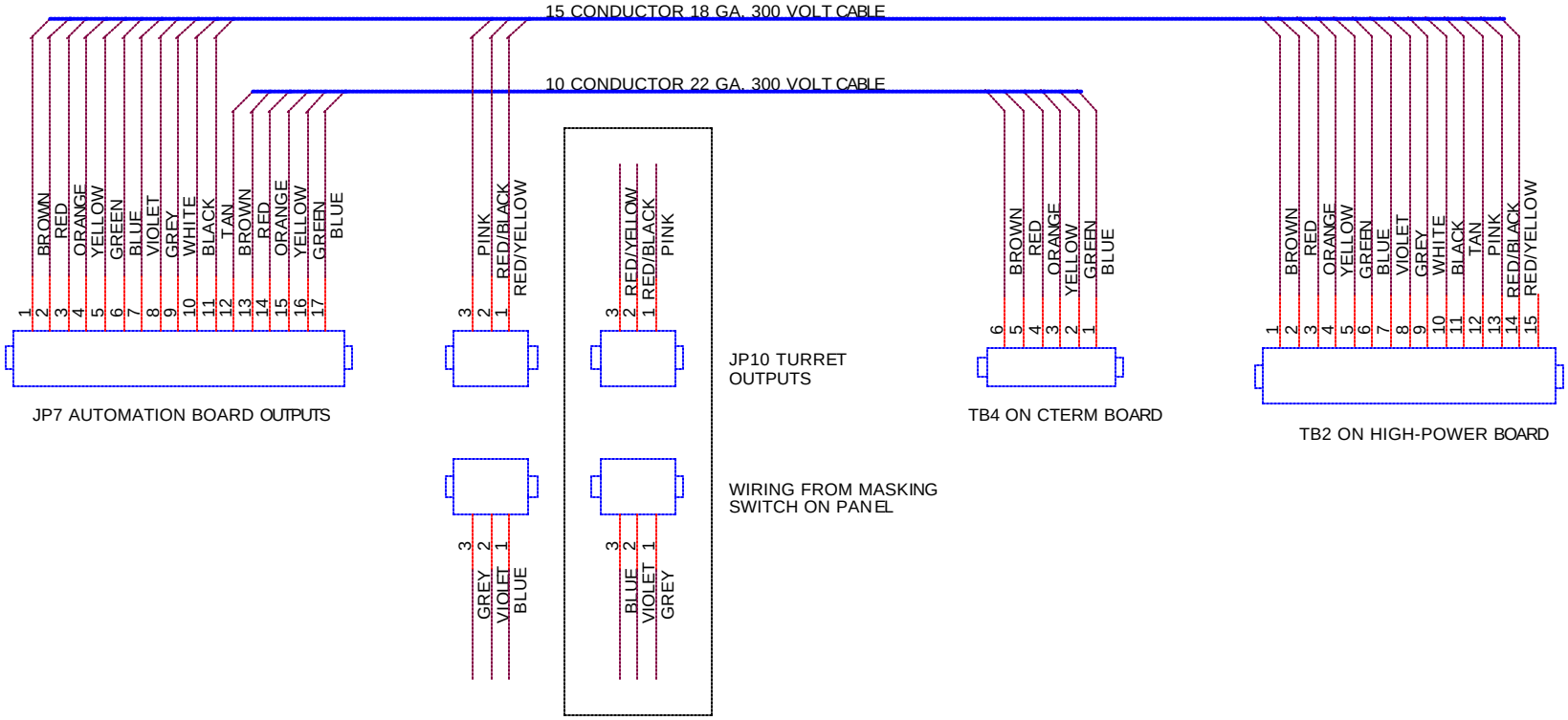

BIG SKY INDUSTRIES

259 CENTER ST
PHILLIPSBURG, NJ 08865

Title: AUTOMATION HIGH POWER INTERFACE CABLES

Size	Document Number	Rev
A	AHPI.SCH	

Date: Wednesday, October 24, 2001 | Sheet 1 of 1